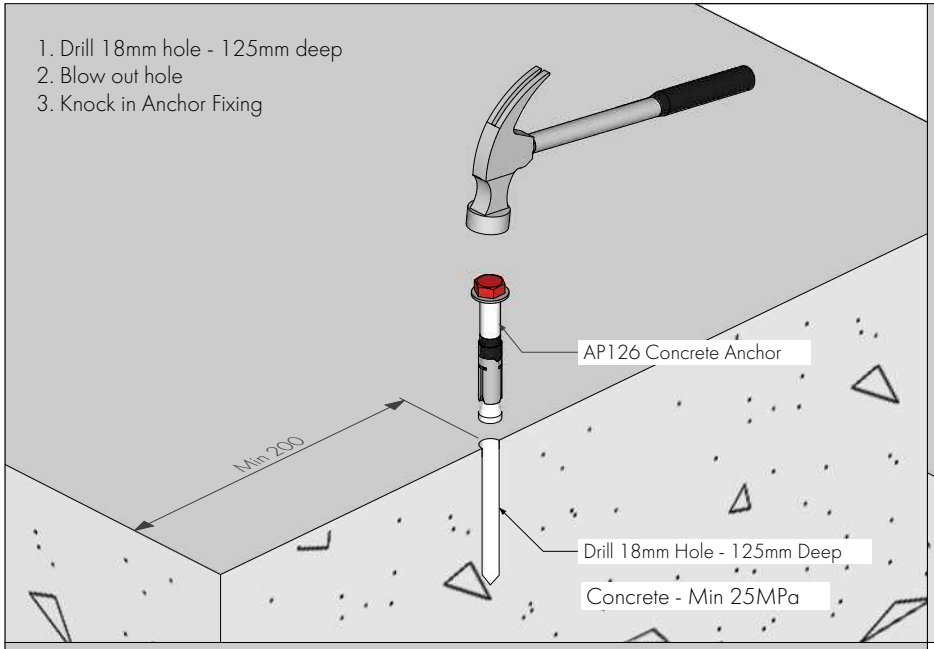

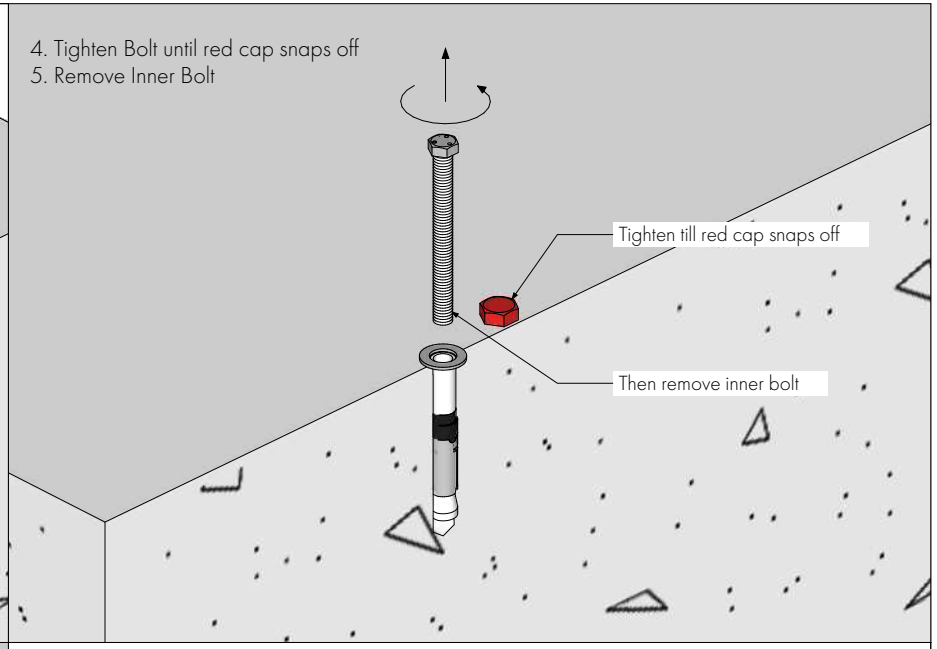

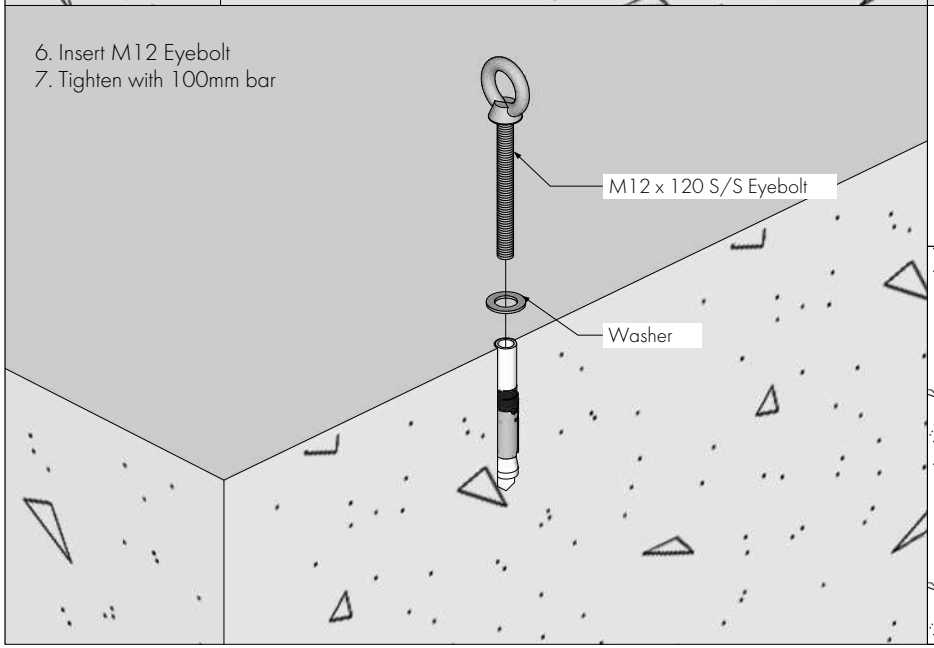

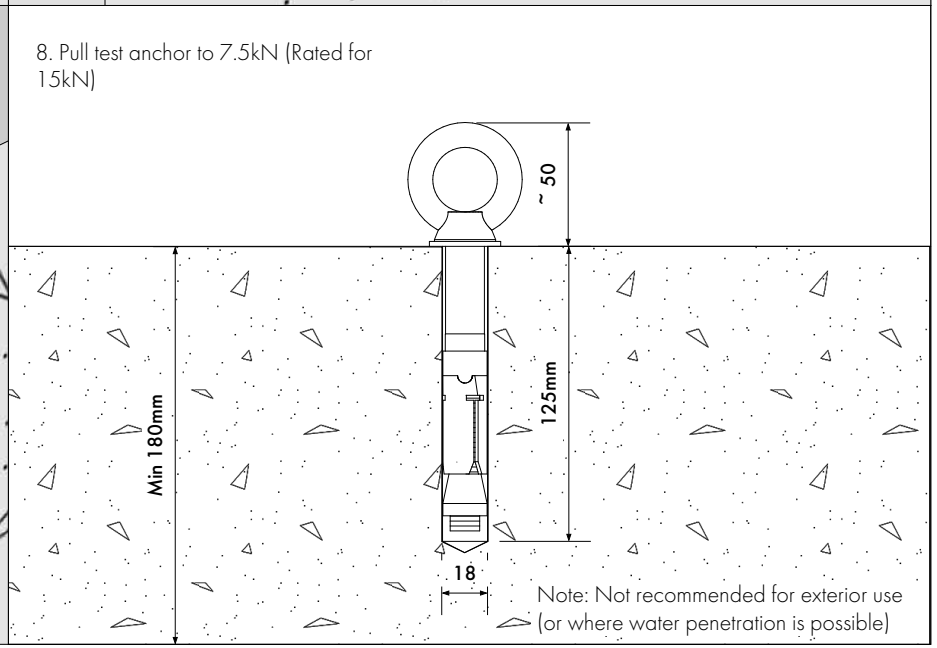

SAYFA GROUP
1029 MOUNTAIN HWY BORONIA VIC 3155
T +61 1300 301 755 **F** +61 1300 881 092
E sales@sayfa.com.au **E** sayfa.com.au

THIS PROPERTY REMAINS THE PROPERTY OF SAYFA GROUP AND MAY NOT BE CHANGED WITHOUT WRITTEN PERMISSIONFOR FURTHER INFORMATION REFER TO OUR WEBSITE AT sayfa.com.au

DESCRIPTION	DRG No.	DATE
Concrete Mount Anchor with Torque Indicator	6168	20/09/2018
	Code	REV
	AP126	1

XPLORA

TECHNICAL DRAWING