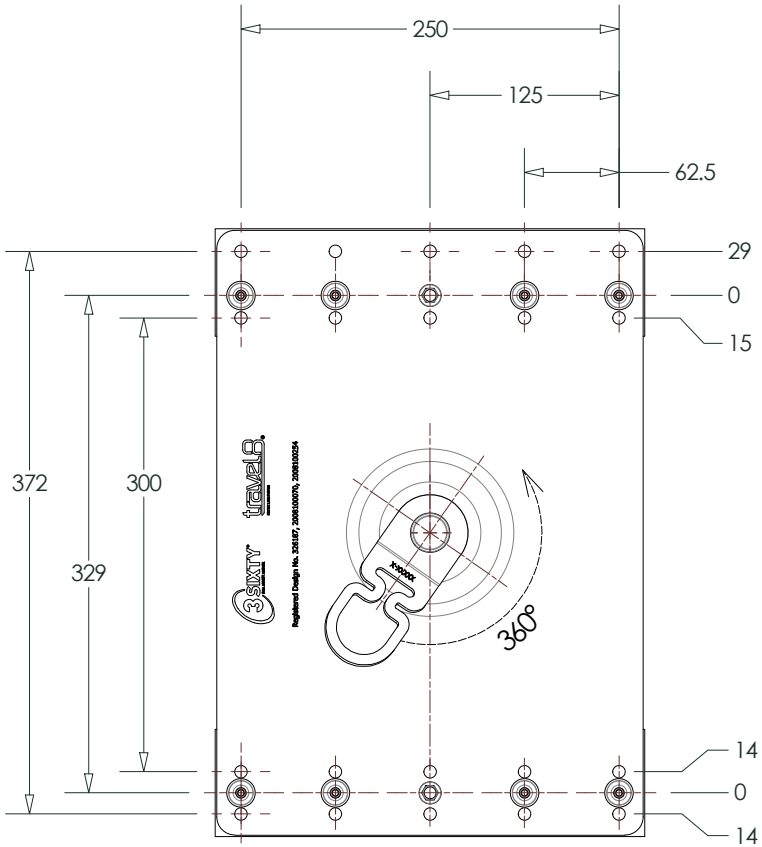


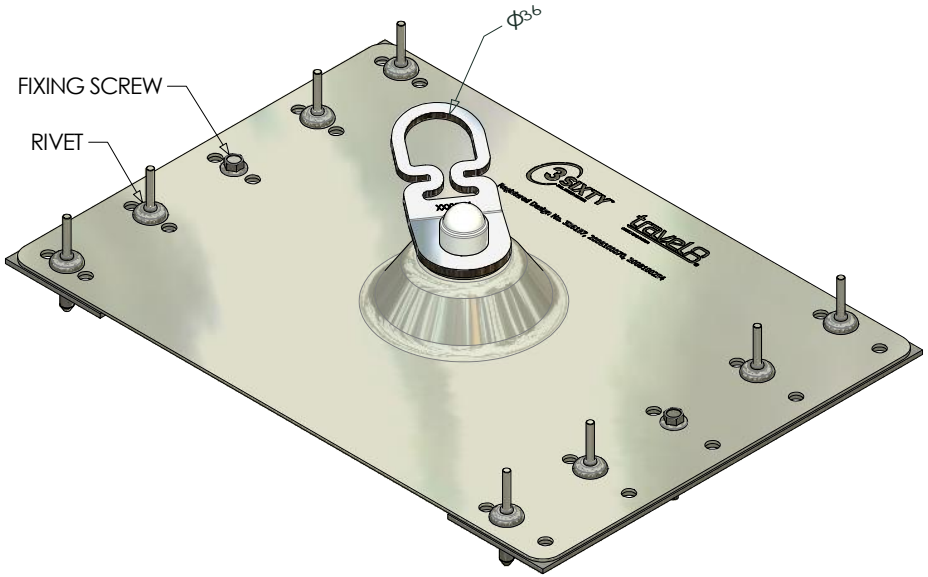


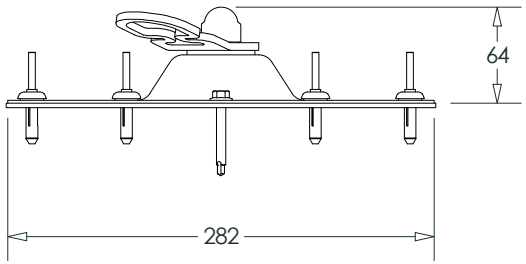


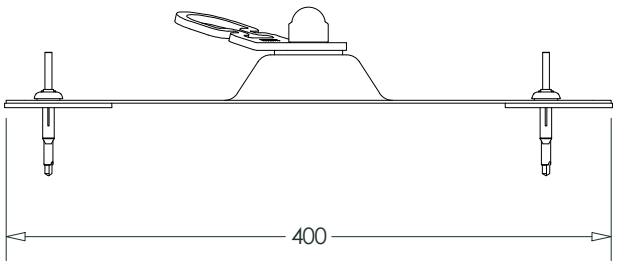


SAYFA GROUP
1029 MOUNTAIN HWY BORONIA VIC 3155
T +61 1300 301 755 F +61 1300 881 092
E info@sayfa.com.au W sayfa.com.au
ABN 47 631 210 199

THIS DRAWING REMAINS THE PROPERTY OF SAYFA GROUP® AND MAY NOT BE CHANGED WITHOUT WRITTEN PERMISSION
FOR FURTHER INFORMATION REFER TO OUR WEBSITE AT sayfa.com.au/terms-and-conditions

DESCRIPTION
TOP MOUNT ANCHOR WIDE DECK

| DWG No. | DATE |
|---|---|
| | 6/12/2017 |
| CODE | REV |
| AP130W | 1 |

3SIXTY

TECHNICAL DRAWING