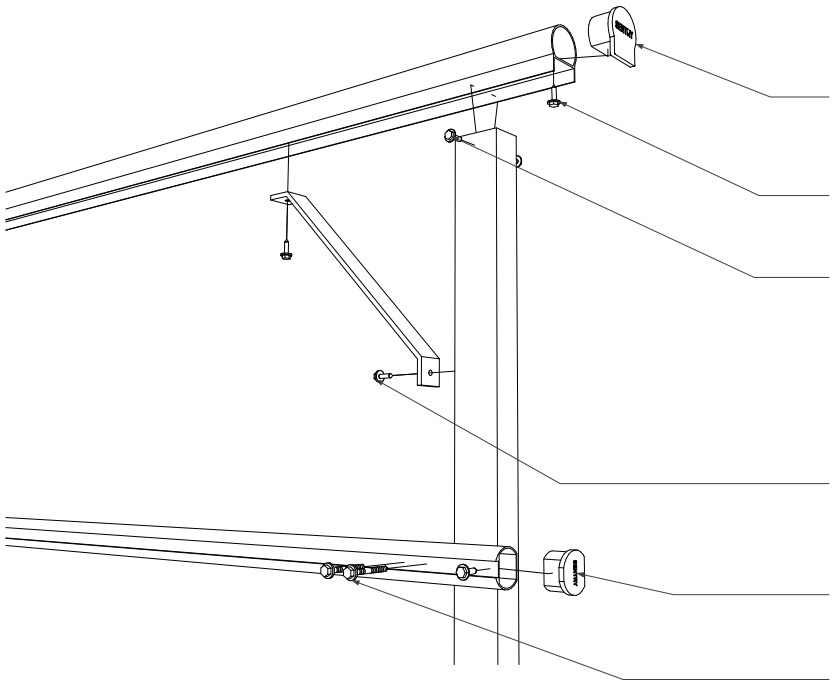

SW378 - SENTRY Handrail Endcap

SD907.20 - 20mm Tek Screw

SD910.10 - Screw 10-16 x 16mm Tek Screw
(2 per post)

SD907.20 - 20mm Tek Screw

GW379 - SENTRY Kneerail Endcap

SD907.48 - 48mm Tek Screw (2 per post)

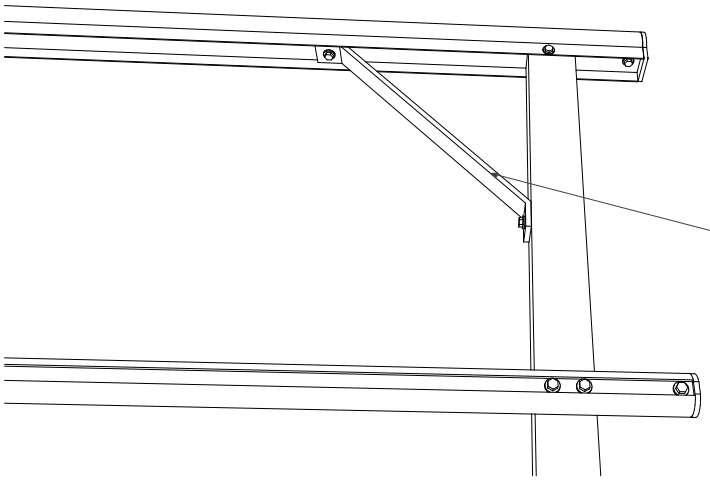

GW384 - Handrail Brace

Note: - 2 required for every straight run of guardrail

SAYFA GROUP
1029 MOUNTAIN HWY BORONIA VIC 3155
T +61 1300 301 755 **F** +61 1300 881 092
E sales@sayfa.com.au **E** sayfa.com.au

THIS PROPERTY REMAINS THE PROPERTY OF SAYFA GROUP AND MAY NOT BE CHANGED WITHOUT WRITTEN PERMISSIONFOR FURTHER INFORMATION REFER TO OUR WEBSITE AT sayfa.com.au

DESCRIPTION	DRG No.	DATE
SENTRY End Caps and Brace Installation Details	6402	25/10/2018
	Code	REV
	GW378/9 - GW384	1

SENTRY

TECHNICAL DRAWING