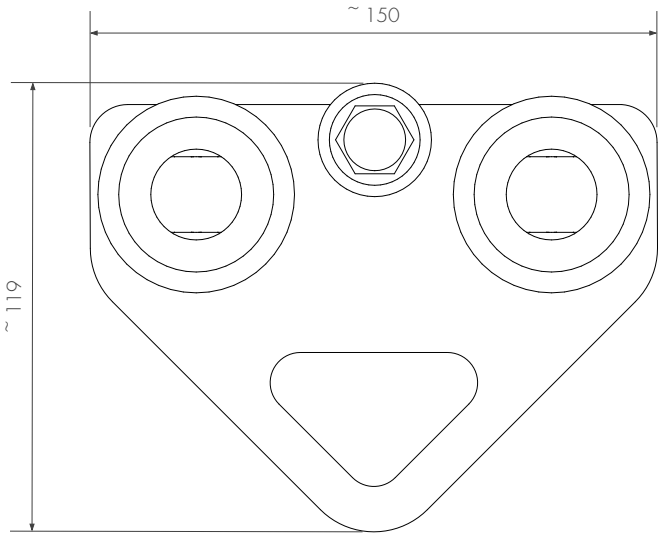


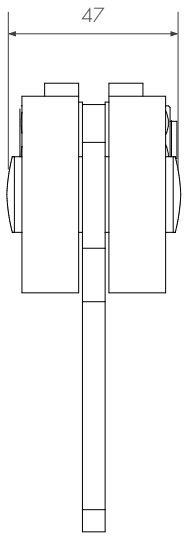


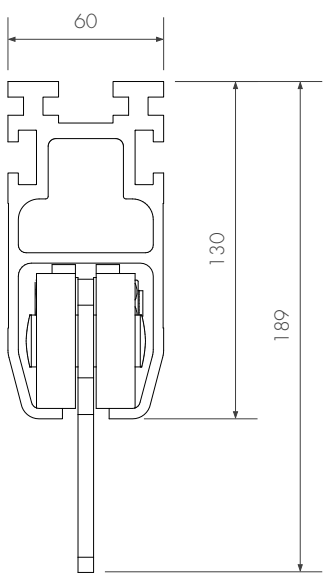


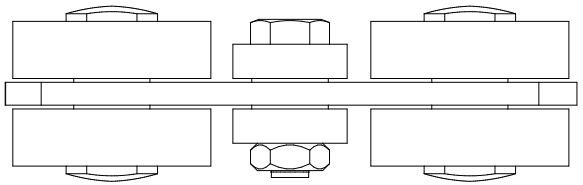

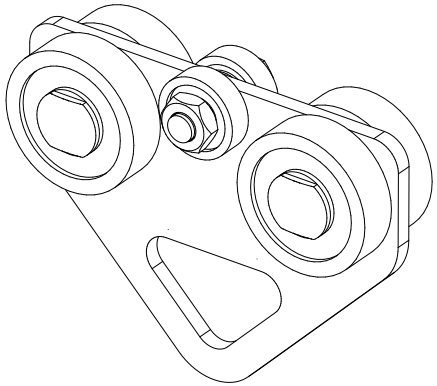

RAPTOR

TECHNICAL DRAWING

SAYFA GROUP
1029 MOUNTAIN HWY BORONIA VIC 3155
**T** +61 1300 301 755 **F** +61 1300 881 092
**E** sales@sayfa.com.au **E** sayfa.com.au

THIS PROPERTY REMAINS THE PROPERTY OF SAYFA GROUP AND MAY NOT BE CHANGED WITHOUT WRITTEN PERMISSIONFOR FURTHER INFORMATION REFER TO OUR WEBSITE AT sayfa.com.au

| DESCRIPTION | DRG No. | DATE |
|---|---|---|
| Standard Trolley (Fall Arrest or Abseil 15kN rated | 1318 | 20/09/2018 |
| | Code | REV |
| | OH260 | 1 |