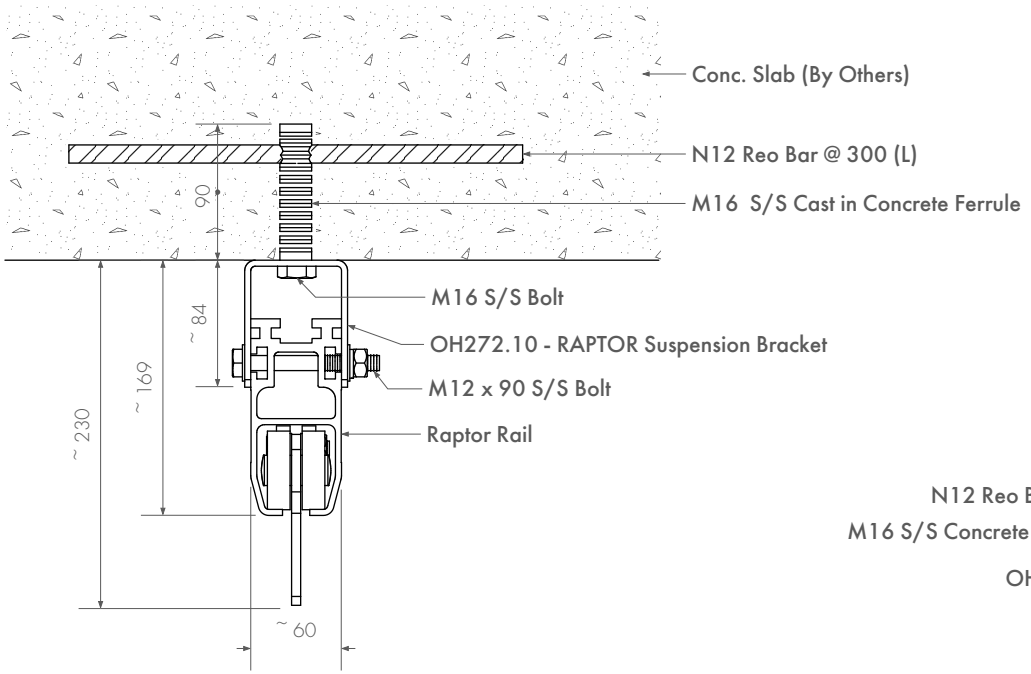

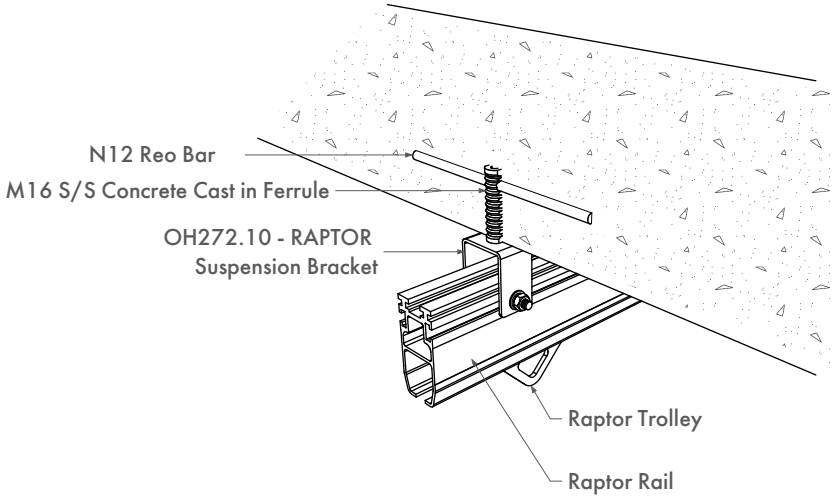

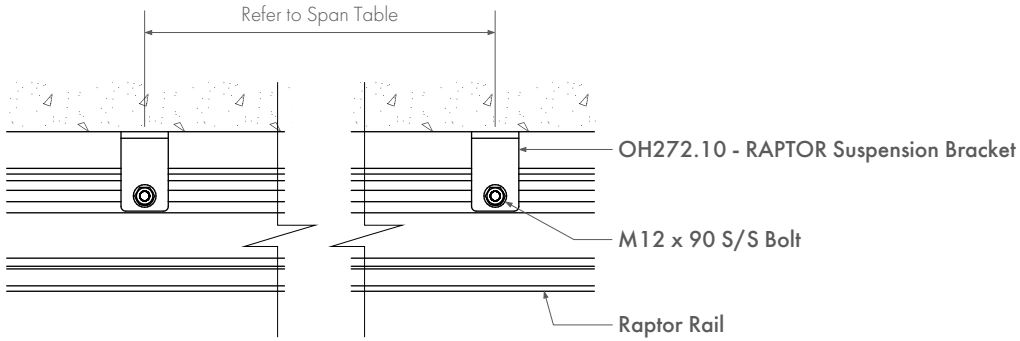

SAYFA GROUP
1029 MOUNTAIN HWY BORONIA VIC 3155
T +61 1300 301 755 **F** +61 1300 881 092
E sales@sayfa.com.au **E** sayfa.com.au

THIS PROPERTY REMAINS THE PROPERTY OF SAYFA GROUP AND MAY NOT BE CHANGED WITHOUT WRITTEN PERMISSIONFOR FURTHER INFORMATION REFER TO OUR WEBSITE AT sayfa.com.au

DESCRIPTION	DRG No.	DATE
FLUSH MOUNT	6856	16/8/2018
	Code	REV
	OH3	1

RAPTOR

TECHNICAL DRAWING