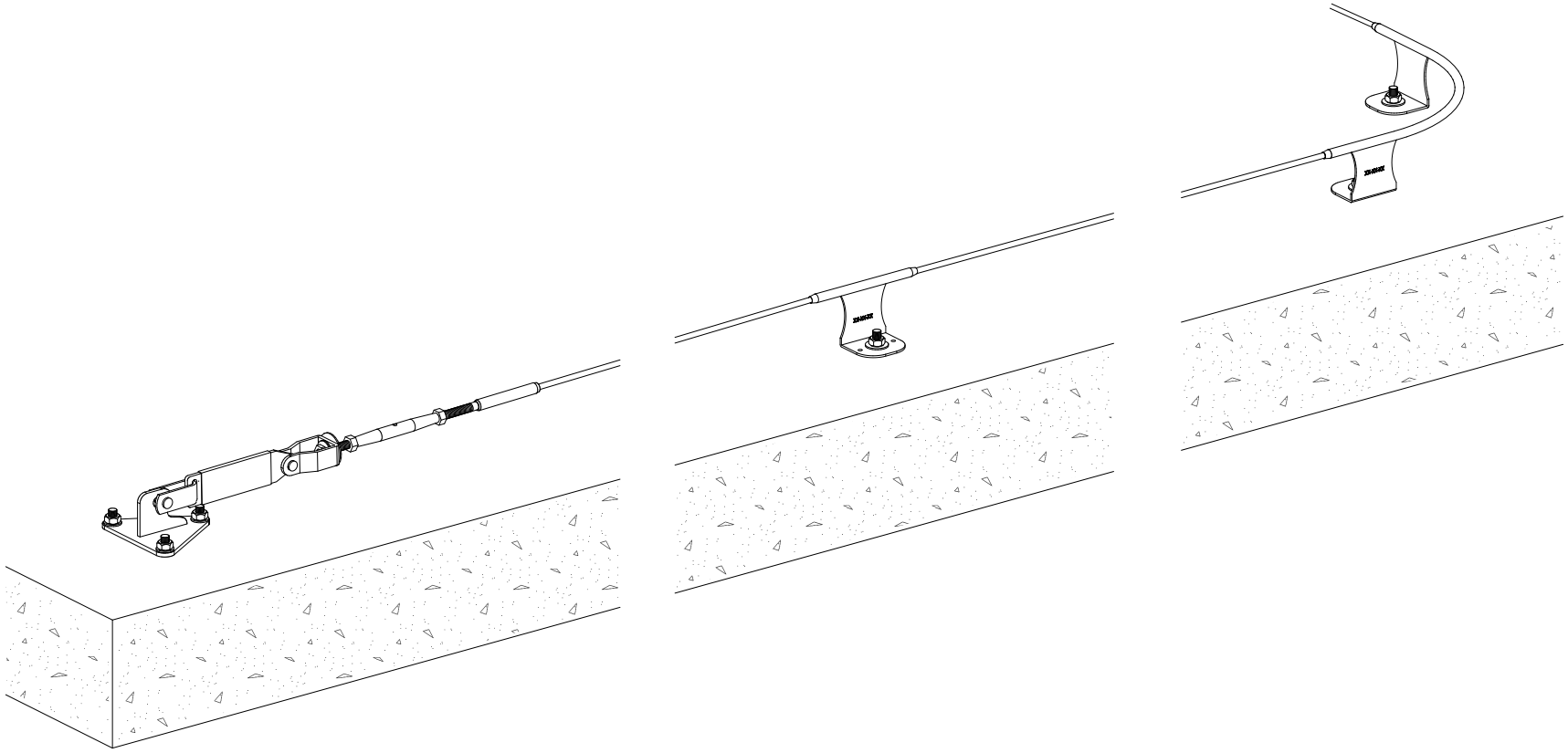

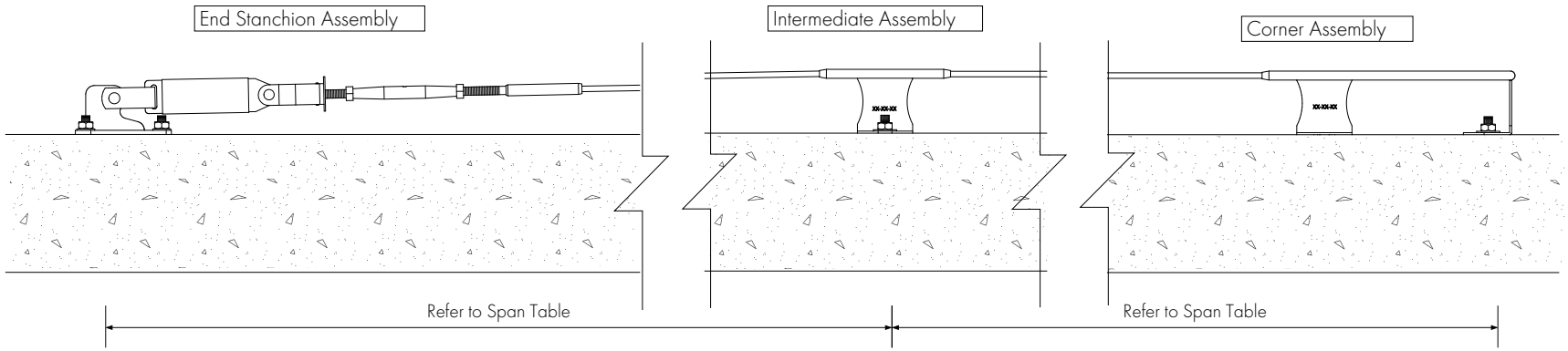


SAYFA GROUP
1029 MOUNTAIN HWY BORONIA VIC 3155
**T** +61 1300 301 755 **F** +61 1300 881 092
**E** sales@sayfa.com.au **E** sayfa.com.au

THIS PROPERTY REMAINS THE PROPERTY OF SAYFA GROUP AND MAY NOT BE CHANGED WITHOUT WRITTEN PERMISSIONFOR FURTHER INFORMATION REFER TO OUR WEBSITE AT sayfa.com.au

DESCRIPTION

CONCRETE MOUNT STATIC LINE SYSTEM, 150MM RAISED

| DRG No. | DATE |
|---|---|
| 8024 | 16/8/2018 |
| Code | REV |
| SL6 | 3 |

SENTRY

TECHNICAL DRAWING